drawing of ITABAR–Sensor type IBFD–25 in a horizontal pipe

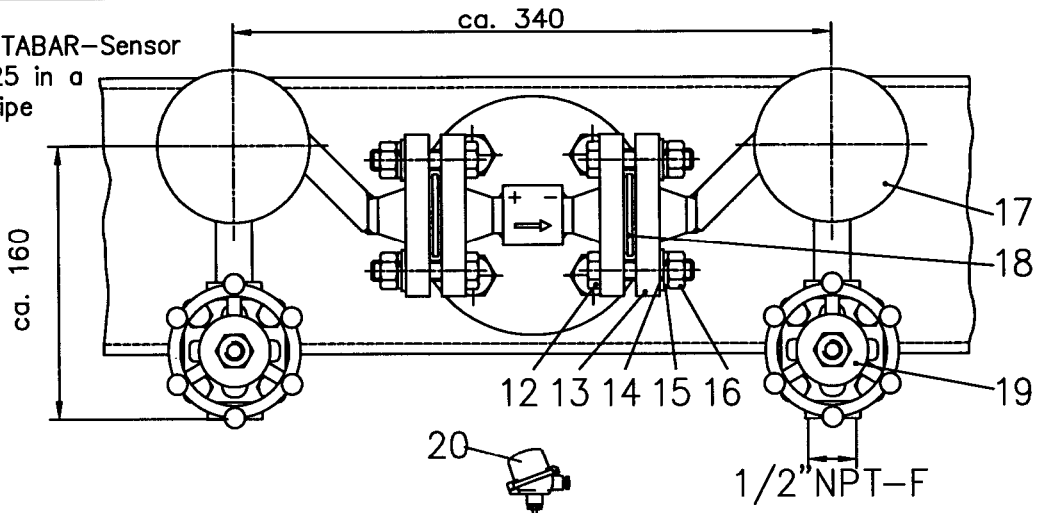

drawing of ITABAR–Sensor type IBFD–25 without instrument connection

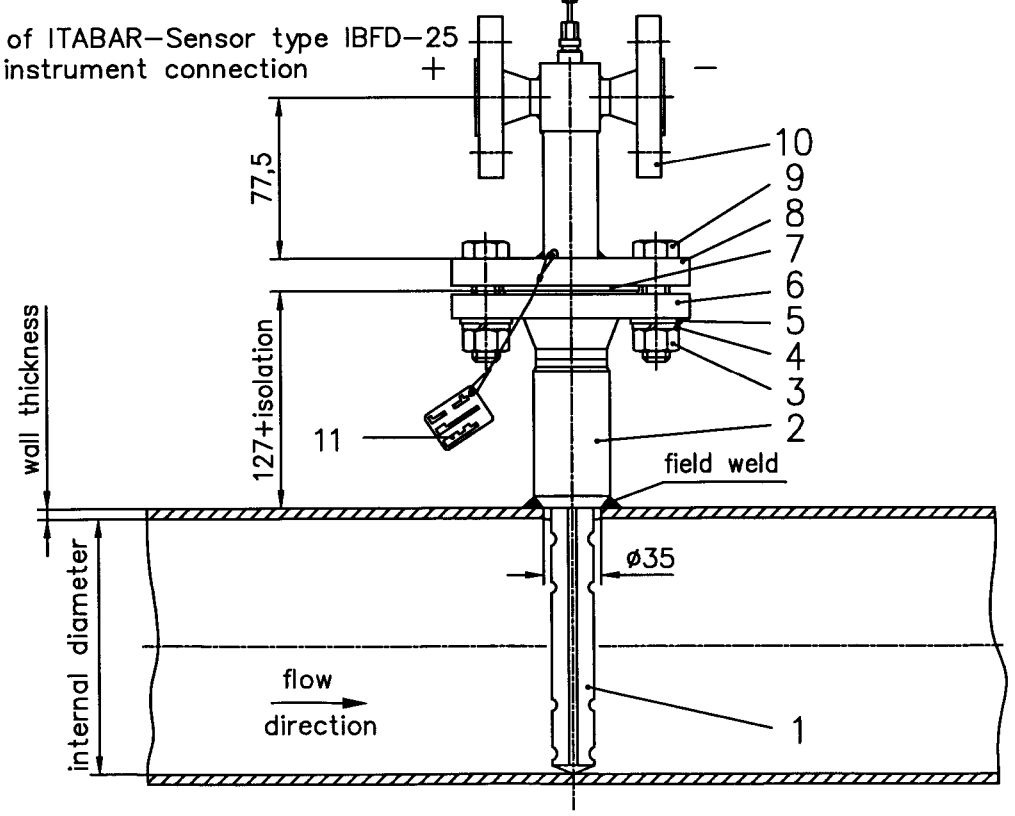

client	
quotation/order	
TAG no.	
internal pipe diameter	
wall thickness	
medium	
max. flow	
pressure	
temperature	
density	

pipe line

horizontal ☐ vertical ☐

Item	description	pc.	standard/dwg	standard material	alternative material
20	RTD (PT 100) sensor	1			
19	shut–off valve	2		A 105	316Ti
18	gasket	2		Klingersil	Klingersil
17	condensation vessel ø88,9	2		CS	316Ti
16	nut M12	4	DIN 934	5.2	5.2
15	spring washer	4	DIN 127	CS galv.	CS galv.
14	washer	4	DIN 125	CS galv.	CS galv.
13	welding neck flange DN15/PN40	2	DIN 2635	CS	316Ti
12	screw M12	4	DIN 931	5.6	5.6
11	TAG plate	1		316SS	316SS
10	welding neck flange DN15/PN40	2	DIN 2635	316Ti	316Ti
9	screw M16	4	DIN 931	5.6	5.6
8	sensor flange	1		316Ti	316Ti
7	gasket	1		Klingersil	Klingersil
6	welding neck flange DN32/PN40	1	DIN 2635	CS	316Ti
5	washer	4	DIN 125	CS galv.	CS galv.
4	spring washer	4	DIN 127	CS galv.	CS galv.
3	nut M16	4	DIN 934	5.2	5.2
2	mounting stud	1		CS	316Ti
1	sensor profile ø25,4mm	1		316Ti	316Ti

index	revision	date	name

description:

ITABAR–Flow–Sensor
type: IBFD–25

	Datum	Name
Gez.	25.01.2005	Schwanse
Gepr.		
Norm		

Maßstab: ./. Format: A4

INTRA–AUTOMATION GmbH
Otto–Hahn–Straße 20
41515 Grevenbroich

Zeichnungs–Nr.: ZSON/STD/E/IBFD–25–PT Rev. 0 Blatt: 1/1

Ursprung: Ers.f.fr: Ers.durch: